MORNING STAR & FLAME LAKE DRIVE ROADWAY IMPROVEMENTS PROJECT, PHASE II

VILLAGE OF ROAMING SHORES

ROAMING SHORES, OHIO 44084

OCTOBER 2015

INDEX OF SHEETS

TITLE SHEET	1
TYPICAL SECTION	2
GENERAL NOTES	3
GENERAL SUMMARY	4
SUB-SUMMARIES	5-6
PLAN & PROFILE	7-10
CROSS-SECTION	11-16
DRAINAGE DETAILS	17
STANDARD DETAILS	18

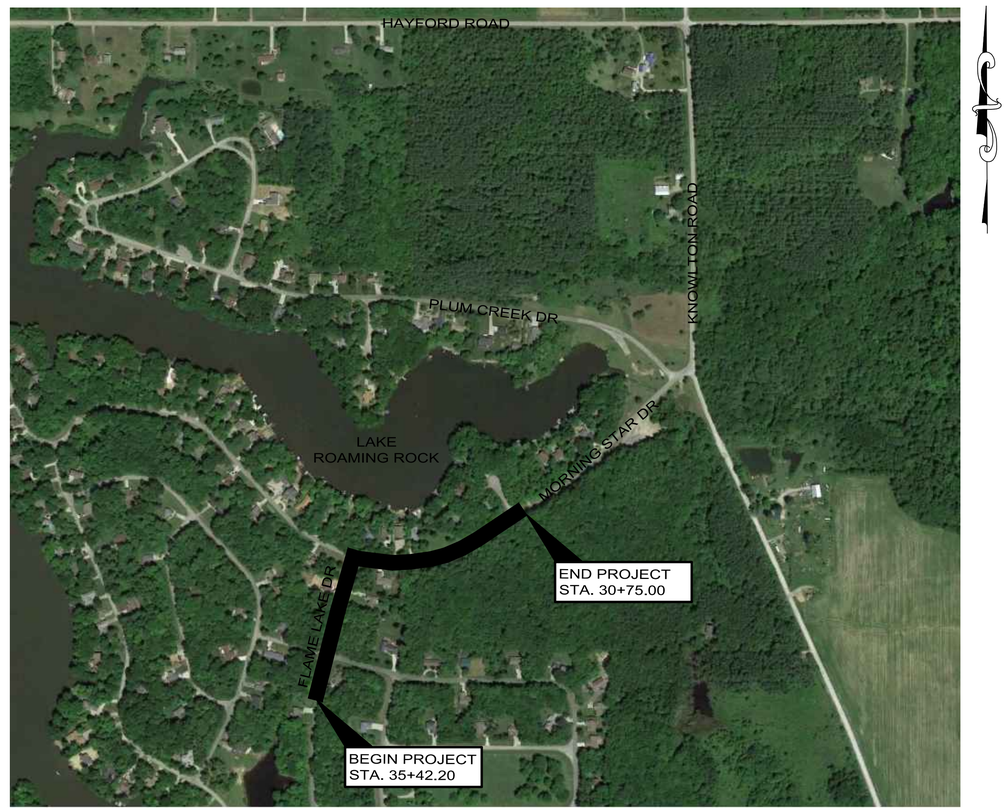

LOCATION MAP

NTS

VILLAGE COUNCIL

BOB COOK, PRESIDENT
CHERYL FAIN
MARLENE HOCEVAR
EDWARD KOZIOL
MARK REIGHARD
ROY BROMMER

OHIO Utilities Protection SERVICE
Call Before You Dig
1-800-362-2764
www.oups.org

PLANS PREPARED BY:

SMOLEN ENGINEERING, LTD.
1876 STATE ROUTE 46 NORTH
JEFFERSON, OHIO 44047

JOHN BALL, MAYOR _____ DATE _____

JOHN W. SMOLEN P.E., P.S. _____ DATE _____

STATE OF OHIO
JOHN WILLIAM SMOLEN, JR.
E-38665
REGISTERED
PROFESSIONAL ENGINEER

SMOLEN ENGINEERING
1876 State Route 46 North, Jefferson, OH 44047
440-576-0505

NO.	DATE	REVISION

PROJECT NO. SEL698
SCALE:
DATE: 10/26/15
DESIGN: DDB
DRAWN: DDB
CHECK: JWS

MORNING STAR & FLAME LAKE DRIVE
ROADWAY IMPROVEMENTS, PHASE II
ROAMING SHORES, OHIO

TITLE SHEET

SHEET NO.
1

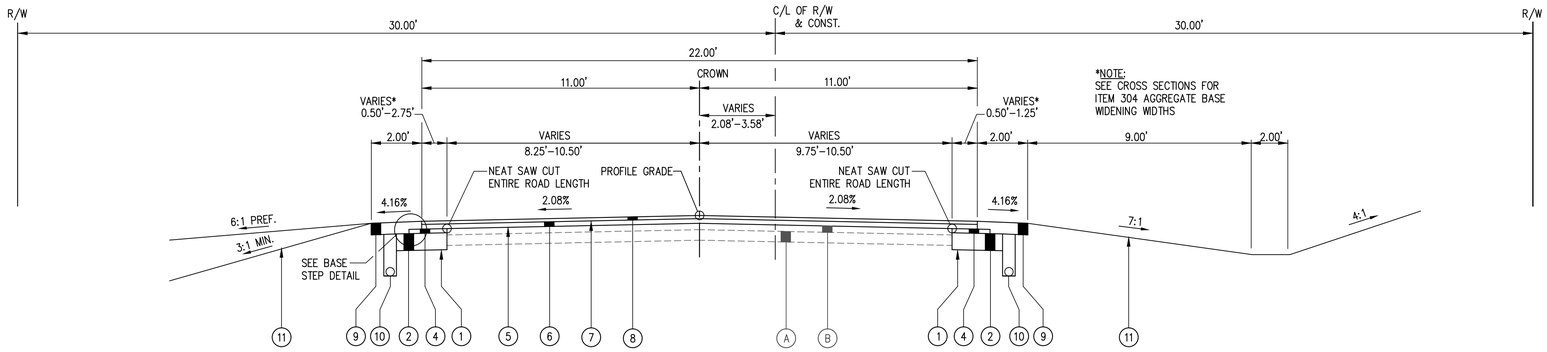

NORMAL SECTION – MORNING STAR DRIVE

STA. 20+89.70 TO 30+76.00

*NOTE:
SEE CROSS SECTIONS FOR
ITEM 304 AGGREGATE BASE
WIDENING WIDTHS

PROPOSED LEGEND

1. ITEM 204 – SUBGRADE COMPACTION
2. ITEM 304 – 8" AGGREGATE BASE
3. NOT USED
4. ITEM 448 – 2" ASPHALT CONCRETE INTERMEDIATE COURSE, TYPE 2, PG64–22
5. ITEM 407 – TACK COAT FOR INTERMEDIATE COURSE @ 0.10 GAL./SQ. YD.
6. ITEM 448 – 2.25" ASPHALT CONCRETE INTERMEDIATE COURSE, TYPE 2, PG64–22
7. ITEM 407 – TACK COAT @ 0.10 GAL./SQ. YD.
8. ITEM 448 – 1.5" ASPHALT CONCRETE SURFACE COURSE, TYPE 1 PG70–22
9. ITEM 617 – 6" COMPACTED AGGREGATE
10. ITEM 605 – 4" SHALLOW PIPE UNDERDRAIN (SEE PLAN & PROFILE FOR LOCATIONS)
11. ITEM 659 – SEEDING AND MULCHING

EXISTING LEGEND

- A BUILT-UP CHIP SEAL LAYERS
- B AGGREGATE BASE

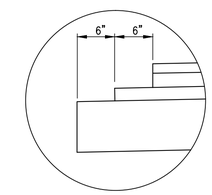

BASE STEP DETAIL

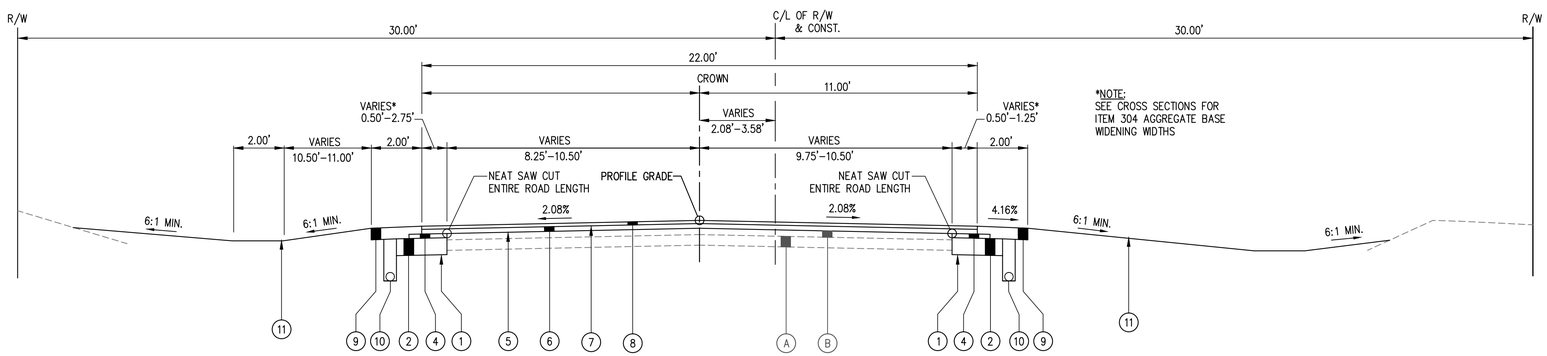

NORMAL SECTION – FLAME LAKE DRIVE

STA. 36+00.00 TO 39+87.83

*NOTE:
SEE CROSS SECTIONS FOR
ITEM 304 AGGREGATE BASE
WIDENING WIDTHS

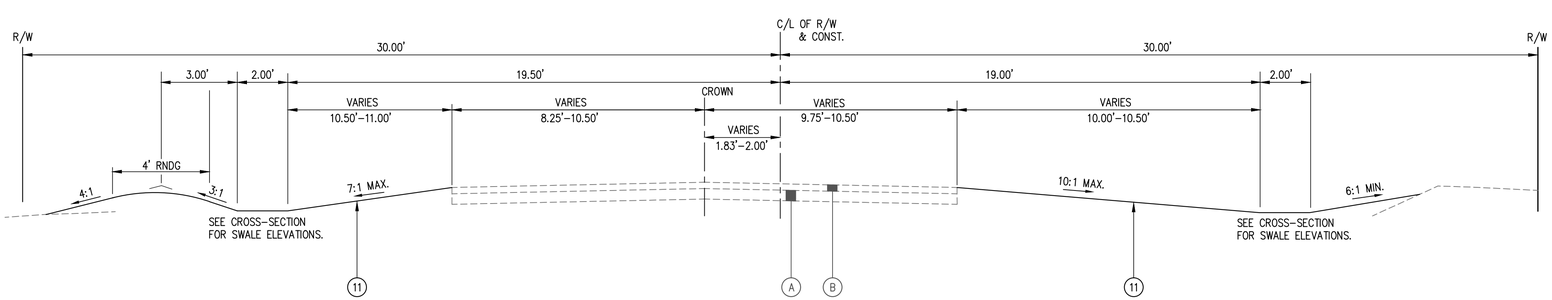

NORMAL SECTION – FLAME LAKE DRIVE

STA. 31+80.00 TO 36+00.00

SMOLEN ENGINEERING
1878 State Route 46 North, Jefferson, OH 44047
440-576-5565

NO.	DATE	REVISION

PROJECT NO. SEL698
SCALE:
DATE: 10/26/15
DESIGN: DDB
DRAWN: DDB
CHECK: JWS

MORNING STAR & FLAME LAKE DRIVE
ROADWAY IMPROVEMENTS, PHASE II
ROAMING SHORES, OHIO

TYPICAL SECTION

SHEET NO.
2

REFERENCE SPECIFICATIONS
THE LATEST EDITION OF THE CONSTRUCTION AND MATERIAL SPECIFICATIONS OF THE OHIO DEPARTMENT OF TRANSPORTATION (ODOT) SHALL GOVERN THIS PROJECT (EXCEPT 100 SERIES TITLED "GENERAL PROVISIONS) UNLESS OTHERWISE NOTED ON THE PLANS AND/OR SPECIFICATIONS. EACH ITEM OR SECTION REFERRED TO IN THE ODOT SPECIFICATIONS SHALL HAVE THE SAME EFFECT, APPLICATION, AND FORCE AS IF PRODUCED IN THEIR ENTIRETY.

NOTICE SHOULD BE TAKEN THAT THE ODOT SPECIFICATIONS ARE TO BE USED FOR THE METHOD OF CONSTRUCTION, INSTALLATION, AND ACCEPTANCE OF THE REFERENCED ITEM(S); AND THAT THE UNIT OF MEASURE TO BE USED FOR PAYMENT PURPOSES MAY OR MAY NOT CORRESPOND TO THAT USED BY ODOT.

WHERE AN ODOT SPECIFICATION IS MODIFIED, THE MODIFICATION SHALL PREVAIL WITHOUT ALTERING THE FORCE AND APPLICATION OF THE REMAINING SECTION OF THE ODOT SPECIFICATION.

THE CONTRACTOR SHALL NOTIFY THE OWNER AND ENGINEER AT LEAST TWO (2) WORKING DAYS BEFORE COMMENCING ANY WORK.

EXISTING UTILITIES PROTECTION
THE IDENTITY AND LOCATION OF EXISTING UNDERGROUND UTILITIES IN AND AROUND THE PROJECT AREA HAVE BEEN SHOWN AND CALLED OUT ON THE PLANS BY USING EXISTING PLANS AS SUPPLIED BY THE RESPECTIVE UTILITY OWNERS AND BY FIELD LOCATIONS OBTAINED BY SURVEY WORK. THE OWNER NOR THE CONSULTING ENGINEER SHALL BE HELD RESPONSIBLE FOR THE ACCURACY OF THE ACTUAL LOCATION OR ELEVATION OF EXISTING UNDERGROUND UTILITIES AS SHOWN ON THE PLANS. SUPPORT, PROTECTION, AND RESTORATION OF ALL EXISTING UTILITIES AND APPURTENANCES SHALL BE THE RESPONSIBILITY OF THE CONTRACTOR. THE COST OF THIS WORK SHALL BE INCLUDED IN THE PRICE BID FOR VARIOUS ITEMS.

THE CONTRACTOR SHALL GIVE 48-HOUR NOTICE TO THE OHIO UTILITIES PROTECTION SERVICE (OUPS) BY CALLING (800) 362-2764. FORTY-EIGHT (48) HOUR NOTICE SHALL BE GIVEN TO THE OWNERS OF UNDERGROUND UTILITIES SHOWN ON THE PLANS WHO ARE NOT MEMBERS OF A REGISTERED UNDERGROUND PROTECTION SERVICE IN ACCORDANCE WITH SECTION 153.64 OF THE REVISED CODE.

UTILITY CONTACTS
THE FOLLOWING UTILITIES AND OWNERS ARE LOCATED WITHIN THE WORK LIMITS OF THE PROJECT:

ELECTRIC:
FIRST ENERGY/ILLUMINATING CO.
ATTN: MARK E. ROBINSON
6896 MILLER ROAD
BRECKSVILLE, OHIO
PHONE: (440) 717-6845

WATER:
ROAMING SHORES VILLAGE
PO BOX 237
2500 HAYFORD ROAD
ROAMING SHORES, OHIO 44084
(440) 563-3132

TELEPHONE:
WINDSTREAM COMMUNICATIONS
ATTN: RICK ANDREGO
PO BOX 1010
ASHTABULA, OHIO 44005-1010
PHONE: (440) 993-1621

GAS:
ORWELL NATURAL GAS
ATTN: ANN YEAGER
95 EAST MAIN STREET
ORWELL, OHIO 44076
PHONE: (800) 832-6164

CABLE TV:
ZITO MEDIA
611 VADER HILL ROAD
COUDERSPORT, PENNSYLVANIA 16915
PHONE: (866) 755-2948

SEWER:
ROAMING SHORES VILLAGE
PO BOX 237
2500 HAYFORD ROAD
ROAMING SHORES, OHIO 44084
(440) 563-3132

CONSTRUCTION OBSERVATION
CONSTRUCTION OBSERVATION SERVICES SHALL BE PERFORMED BY A REPRESENTATIVE OF THE VILLAGE UNDER THE SUPERVISION OF A PROFESSIONAL ENGINEER REGISTERED IN THE STATE OF OHIO. THE COST OF INSPECTION SHALL BE INCLUDED AS PART OF THIS CONSTRUCTION PROJECT AT A RATE OF $480.00 PER 8 HOUR DAY. COST FOR INSPECTION SHALL BE THE SOLE RESPONSIBILITY OF THE CONTRACTOR. OVERTIME, WEEKENDS, AND HOLIDAYS SHALL BE A RATE OF 1.5 TIMES THE BASE RATE.

SAFETY REQUIREMENTS
THE CONTRACTOR AND SUBCONTRACTORS SHALL BE SOLELY RESPONSIBLE FOR ALL FEDERAL, STATE, AND LOCAL SAFETY REQUIREMENTS, TOGETHER WITH EXERCISING PRECAUTIONS AT ALL TIMES FOR THE PROTECTION OF PERSONS (INCLUDING EMPLOYEES) AND PROPERTY. IT IS ALSO THE SOLE RESPONSIBILITY OF THE CONTRACTOR AND SUBCONTRACTORS TO INITIATE, MAINTAIN, AND SUPERVISE ALL SAFETY REQUIREMENTS, PRECAUTIONS, AND PROGRAMS IN CONNECTION WITH THE WORK.

MATERIAL SAFETY DATA SHEETS
THE CONTRACTOR SHALL SUBMIT, FOR INFORMATION ONLY, THE MANUFACTURER'S HAZARDOUS MATERIALS COMMUNICATION INFORMATION FORMS FOR ALL MATERIALS TO BE INCORPORATED INTO THE WORK.

MISCELLANEOUS WORK ITEMS
THE CONTRACTOR SHALL PERFORM ALL ITEMS OF WORK CALLED FOR ON THE PLANS, FOR WHICH NO SPECIFIC METHOD OF PAYMENT IS PROVIDED. THE COST OF IT SHALL BE INCLUDED IN THE VARIOUS UNIT PRICES BID FOR THE PROJECT IMPROVEMENT.

ADDITIONAL WORK
ANY ADDITIONAL WORK SHALL BE REPORTED TO THE ENGINEER FOR REVIEW AT LEAST 10 BUSINESS DAYS PRIOR TO BEGINNING ADDITIONAL CONSTRUCTION WORK. FOR COORDINATION PURPOSES DATES FOR ADDITIONAL CONSTRUCTION WORK SHALL ALSO BE SUBMITTED TO THE ENGINEER. THE ENGINEER RESERVES THE RIGHT TO OBSERVE, REVIEW, REJECT, OR MODIFY ANY ADDITIONAL CONSTRUCTION SERVICES WHICH ARE PROPOSED AFTER THE BID HAS BEEN AWARDED.

CONTINGENCY QUANTITIES
THE CONTRACTOR SHALL NOT ORDER MATERIALS OR PERFORM WORK SHOWN, LABELED, OR LISTED AS "CONTINGENCY" OR REFERENCED BY PLAN NOTE TO BE USED "AS DIRECTED BY ENGINEER," UNLESS AUTHORIZED BY THE ENGINEER.

CONSTRUCTION DAMAGE
ALL SIGNS, FENCES, SHRUBS, DRAINAGE STRUCTURES, OR OTHER PHYSICAL FEATURES DISTURBED OR DAMAGED DURING CONSTRUCTION UNDER THIS CONTRACT SHALL BE RESTORED TO THEIR ORIGINAL CONDITION BY THE CONTRACTOR. UNLESS OTHERWISE PROVIDED FOR, THE CONTRACTOR SHALL BE SOLELY RESPONSIBLE FOR THE COST OF THIS WORK.

MAINTAINING ACCESS TO PRIVATE PROPERTY
ACCESS FOR PEDESTRIAN AND VEHICULAR TRAFFIC TO ALL ADJOINING PROPERTIES SHALL BE MAINTAINED AT ALL TIMES. WITH THE WRITTEN PERMISSION OF THE PROPERTY OWNER, DRIVEWAYS OR LEAD WALKS MAY BE CLOSED. THE PERMISSION LETTERS SHALL BE SUBMITTED TO THE ENGINEER BEFORE THE COMMENCEMENT OF THE CLOSURE.

CLEANUP
THE CONTRACTOR SHALL PERFORM DAILY CLEANUP OF THE WORK SITE. ALL TRASH, INCLUDING CANS, BOTTLES, FOOD SCRAPES, CONTAINERS, AND WRAPPERS SHALL BE PROPERLY DISPOSED OF OFF SITE AND SHALL NOT BE THROWN IN THE CONSTRUCTION AREA.

WORK LIMITS
THE WORK LIMITS SHOWN ON THESE PLANS ARE FOR PHYSICAL CONSTRUCTION ONLY. THE INSTALLATION AND OPERATION OF ALL TEMPORARY TRAFFIC CONTROL AND TEMPORARY TRAFFIC CONTROL DEVICES REQUIRED BY THESE PLANS SHALL BE PROVIDED BY THE CONTRACTOR WHETHER INSIDE OR OUTSIDE OF THESE WORK LIMITS.

SAW CUTTING
THE COST OF SAW CUTTING FOR THE PROPER REMOVAL OF PAVEMENT, CURBS, WALKS, ETC. SHALL BE INCLUDED IN THE CONTRACT PRICE FOR 202 WORK ITEMS. SAW CUTTING IS REQUIRED TO PROVIDE A SMOOTH STRAIGHT EDGE FOR REMOVAL PURPOSES.

ROUNDING OF CORNERS
THE ROUNDING AT SLOPE BREAKPOINTS SHOWN ON THE TYPICAL SECTIONS APPLY TO ALL CROSS-SECTIONS EVEN THOUGH OTHERWISE SHOWN.

CONSTRUCTION NOISE
ACTIVITIES AND LAND USE ADJACENT TO THIS PROJECT MAY BE AFFECTED BY CONSTRUCTION NOISE. IN ORDER TO MINIMIZE ANY ADVERSE CONSTRUCTION NOISE IMPACTS, DO NOT OPERATE POWER-OPERATED CONSTRUCTION-TYPE DEVICES BETWEEN THE HOURS OF 8 PM AND 8 AM. IN ADDITION, DO NOT OPERATE AT ANY TIME ANY DEVICE IN SUCH A MANNER THAT THE NOISE CREATED SUBSTANTIALLY EXCEEDS THE NOISE CUSTOMARILY AND NECESSARILY ATTENDANT TO THE REASONABLE AND EFFICIENT PERFORMANCE OF SUCH EQUIPMENT.

SURVEY
THE SURVEY LOCATED ON THESE PLANS PERFORMED BY SMOLEN ENGINEERING, LTD. WAS OBSERVED IN THE FIELD FOR CONSTRUCTION PURPOSES ONLY, AND MAY NOT BE SUITABLE FOR PROPERTY LINES.

MONUMENTED RIGHT-OF-WAY AND PROPERTY CORNERS
AVOID DISTURBING EXISTING RIGHT-OF-WAY OR PROPERTY CORNER MARKERS DURING CONSTRUCTION. IF DISTURBED DURING CONSTRUCTION, THE MARKERS SHALL BE REPLACED AT THE CONTRACTORS EXPENSE BY A PROFESSIONAL SURVEYOR, REGISTERED IN THE STATE OF OHIO.

RELOCATION OF EXISTING GROUND MOUNTED TRAFFIC SIGNS
ALL EXISTING GROUND MOUNTED TRAFFIC SIGNS AND/OR DELINEATORS SHALL BE REMOVED AND REPLACED AT THEIR EXISTING LOCATION WITH A MINIMUM 12-FOOT OFFSET FROM THE EDGE OF THE PAVEMENT AND IN ACCORDANCE WITH THE OHIO MANUAL OF UNIFORM TRAFFIC CONTROL DEVICES AND ODOT ITEM 630, UNLESS DIRECTED OTHERWISE. THE EXISTING GROUND POST AND SIGN ASSEMBLY SHALL BE CAREFULLY REMOVED AND STORED FOR REUSE. ANY UNSALVAGEABLE MATERIALS AS DETERMINED BY THE ENGINEER SHALL BE DISPOSED OF AND REPLACED WITH MATERIALS MEETING THE REQUIREMENTS OF ODOT ITEM 630. THIS WORK SHALL BE INCLUDED IN THE UNIT PRICES FOR OTHER ITEMS.

ALL REGULATORY AND WARNING SIGNS SHALL BE SUITABLY REPOSITIONED IF NECESSARY AND REMAIN IN SERVICE CONTINUOUSLY.

ROADWAY - GENERAL
THE MAJORITY OF THE PROPOSED WORK IS FOR THE WIDENING AND RESURFACING OF EXISTING PAVEMENT. THE ALIGNMENT OF THE EXISTING PAVEMENT WILL NOT BE CHANGED. THE PROFILE OF RESURFACING WILL BE SIMILAR TO THAT OF THE EXISTING PAVEMENT.

ITEM 202, REMOVAL OF GROUND MOUNTED SIGN AND STORAGE
REMOVED SIGNS SHALL BE PROPERTY OF THE VILLAGE. THE CONTRACTOR SHALL MAKE ARRANGEMENTS FOR THE VILLAGE PERSONNEL TO PICK THEM UP UPON REMOVAL.

ITEM 407, TACK COAT
EXISTING PAVEMENT AREAS SHALL BE SWEPT CLEAN PRIOR TO TACK COAT APPLICATION.

TACK COAT SHALL BE APPLIED AT A RATE OF 0.10 GAL./SQ. YD.

ITEMS 448, ASPHALT CONCRETE SURFACE COURSE, TYPE 1, PG64-22, AS PER PLAN
THE JOB MIX FORMULA (JMF) SHALL BE BASED ON A MINIMUM ASPHALT CONTENT FOR ITEM 448 OF 5.0% PLUS THE PERCENT ABSORPTION OF THE AGGREGATE AS DETERMINED BY ASTM C127 AND ASTM C128 TESTING. THE CONTRACTOR SHALL PROVIDE A CERTIFIED ABSORPTION TEST RESULT FOR FINE AND COARSE AGGREGATES. THIS SUPERCEDES ANY OTHER PUBLISHED SPECIFICATION. ALL AGGREGATE SHALL MEET ODOT SUPPLEMENTAL SPECIFICATION 1069.

ALL QUALITY CONTROL TESTING DATA PERFORMED ON MATERIAL INCORPORATED INTO THIS PROJECT SHALL BE FORWARDED TO THE ENGINEER FOR REVIEW AS SOON AS IT IS AVAILABLE.

EXCEPT WHERE DESIGNATED OTHERWISE IN THE PLANS OR SPECIFICATIONS ALL ASPHALT CONCRETE MIXES SHALL BE DESIGNED FOR HEAVY TRAFFIC VOLUMES. THE GRADATION PARAMETERS FOR ITEM 448 SURFACE COURSE, TYPE 1 SHALL BE MODIFIED ON THE ½" SIEVE FROM 95 to 100 TO 85 to 100.

NO RECYCLED ASPHALT PRODUCT (R.A.P.) SHALL BE PERMITTED IN THE SURFACE COURSE.

ALL COARSE AGGREGATE SHALL BE LIMESTONE, UNLESS OTHERWISE APPROVED BY THE ENGINEER.

NO STEEL SLAG SHALL BE USED AS COARSE OF FINE AGGREGATE FOR ANY ASPHALT CONCRETE.

401.20 "ASPHALT BINDER PRICE ADJUSTMENT" SHALL NOT APPLY TO THIS PROJECT.

ONE (1) COPY OF EACH HAULED/WEIGHED MATERIAL TRUCK LOAD TICKET (PLANT TICKET) FOR MATERIALS INCORPORATED IN THIS PROJECT SHALL BE PROVIDED TO THE PROJECT REPRESENTATIVE DAILY. IF A PARTIAL LOAD IS USED, THE CONTRACTOR'S FOREMAN AND PROJECT REPRESENTATIVE SHALL CONFER AND COME TO AN AGREEMENT AS TO WHAT PORTION OF THE PRODUCT WAS USED. THE PERCENT OF MATERIAL OF THIS LOAD, AS REPORTED BY THE PROJECT REPRESENTATIVE, IS WHAT SHALL BE RECORDED AS UTILIZED.

QUANTITY VERIFICATION (BUT NOT NECESSARILY PAYMENT QUANTITY) FOR ALL ASPHALT CONCRETE INCORPORATED INTO THE WORK SHALL BE BY WEIGHT TICKETS AS PRODUCED BY THE PLANT OR SUPPLIER OR OTHER MEANS APPROVED BY THE ENGINEER. TACK COAT SHALL BE VERIFIED BY A TICKET FILLED OUT AND SIGNED BY THE CONTRACTOR'S TACK TRUCK DRIVER BASED ON WEIGHTS TAKEN OR OBSERVATIONS OF LEVEL INDICATORS. ALL VERIFICATION TICKETS ARE REQUIRED TO BE SUBMITTED TO THE ENGINEER ON THE DAY THE MATERIAL IS INCORPORATED INTO THE WORK; HOWEVER, THE ENGINEER MAY, AS HIS SOLE DISCRETION, ACCEPT VERIFICATION TICKETS FOR ANY ITEMS UP TO SEVEN (7) CALENDAR DAYS SUBSEQUENT TO THE WORK BEING PERFORMED. AFTER THAT DATE ADDITIONAL VERIFICATION TICKETS FOR MATERIAL WILL NOT BE ACCEPTED FOR CONSIDERATION OF PAYMENT.

POSITIVE DRAINAGE IS TO EXIST SUBSEQUENT TO THE COMPLETION OF THE SURFACE COURSE. THE CONTRACTOR SHALL TAKE ANY NECESSARY MEASURES TO ASSURE POSITIVE DRAINAGE OF THE SURFACE COURSE. IT SHALL BE THE RESPONSIBILITY OF THE CONTRACTOR TO REPAIR ANY LOW/PUDDLED AREAS AT HIS OWN COST BY MILLING OUT THE AFFECTED AREAS TO A MINIMUM DEPTH EQUAL TO THE NOMINAL DEPTH OF THE COURSE BEING REPAIRED AND REPLACING WITH THE SPECIFIED ASPHALT CONCRETE TO GRADES THAT WILL CORRECT THE DRAINAGE PROBLEM.

AT THE DIRECTION OF THE ENGINEER, PERIODIC WEIGHT CHECKS OF ASPHALT CONCRETE LOADED TRUCKS SHALL BE MADE BY THE CONTRACTOR AND VERIFIED BY THE ENGINEER.

WHERE DIRECTED, THE CONTRACTOR SHALL SET STRING LINES FOR HORIZONTAL GUIDANCE.

ALL EDGES OF THE SURFACE COURSE ABUTTING APPURTENANCES AND AT BUTT JOINTS SHALL BE SEALED WITH ODOT 705.04.

TESTING AND SAMPLING
WHERE JOB LOTS ARE LESS THAN 350 TON, THE ENGINEER MAY WAIVE SAMPLING AND TESTING. ACCEPTANCE THEREFORE WILL BE BASED UPON THE COMPUTER GENERATED DATA FURNISHED BY THE SUPPLIER/CONTRACTOR. ON WORK EXCEEDING 350 TON, RANDOM SAMPLING SHALL BE DONE AS DEEMED NECESSARY BY THE ENGINEER. THE PREDICTABLE SAMPLING WOULD BE ONE (1) SAMPLE EVERY 500 TON OR PART THEREOF. THE AVERAGE OF THE TESTS WILL GOVERN THE ACCEPTANCE OR PAY FACTOR OF THE TOTAL JOB QUANTITY. ALL TESTING WILL BE PERFORMED BY AN INDEPENDENT LABORATORY AND BY PERSONNEL WITH ODOT LEVEL II BITUMINOUS CONCRETE CERTIFICATION. THE CONTRACTOR WILL BE RESPONSIBLE FOR THE COST OF ALL SAMPLING AND TESTING REQUIRED BY THE ENGINEER.

THE ATTACHED CHART WILL GOVERN ACCEPTANCE SCHEDULE FOR BITUMEN. TABLE D. 448.09, O.D.O.T. 1997 CONSTRUCTION AND MATERIAL SPECIFICATION WILL GOVERN ACCEPTANCE FOR SIEVES. DEVIATIONS FROM EITHER TABLE FROM ANY JOB WILL BE AVERAGED TO THE ENTIRE PRODUCTION WHERE JOB LOTS ARE LESS THAN 3,000 TON.

ACCEPTANCE SCHEDULE A (BITUMEN)

PAY FACTOR	1 TEST	2 TEST	3 TEST	4 TEST
1.00	0.0 to −0.2 or 0.0 to 0.8	0.0 to −0.14 or 0.0 to 0.58	0.0 to −0.12 or 0.0 to 0.46	0.0 to −0.10 or 0.0 to 0.40
0.98	−0.2 to −0.32 or 0.8 to 0.9	−0.14 to −0.22 or 0.58 to 0.65	−0.12 to −0.17 or 0.46 to 0.52	−0.1 to −0.15 or 0.40 to 0.45
0.94	−0.3 to −0.4 or 0.9 to 1.0	−0.22 to −0.29 or 0.65 to 0.72	−0.17 to −0.23 or 0.52 to 0.58	−0.15 to −0.20 or 0.40 to 0.45
0.85	−0.4 to −0.5 or 1.0 to 1.1	−0.29 to −0.36 or 0.72 to 0.79	−0.23 to −0.29 or 0.58 to 0.64	−0.20 to −0.25 or 0.50 to 0.55
0.70*	−0.5 to −0.6 or 1.1 to 1.2	−0.36 to −0.43 or 0.79 to 0.95	−0.29 to −0.35 or 0.64 to 0.70	−0.25 to −0.30 or 0.55 to 0.6

*IF THE BITUMEN CONTENT IS LESS THAN REQUIRED FOR A PAY FACTOR OF 0.70, REMOVAL AND REPLACEMENT OF NON-CONFORMING MATERIAL MAY BE REQUIRED AT THE ENGINEER'S DISCRETION.

ITEM 611, 12" CONDUIT, TYPE C, 707.33 AS PER PLAN
TRENCH DETAIL SHALL BE AS SHOWN ON THE STANDARD DETAILS

611.04 "SUBMITTALS B, C & D" SHALL NOT APPLY TO THIS PROJECT.

611.12 "PERFORMANCE INSPECTION" SHALL NOT APPLY TO THIS PROJECT.

611.13 "CONDUIT EVALUATION" SHALL NOT APPLY TO THIS PROJECT.

611.14 "DRAINAGE STRUCTURE EVALUATION" SHALL NOT APPLY TO THIS PROJECT.

ALL STORM DRAINAGE PIPING IN THIS PROJECT SHALL CONFORM TO ODOT 707.33 TYPE SP (PERFORATED)

ITEM 614, MAINTAINING TRAFFIC
TWO WAY TRAFFIC SHALL BE MAINTAINED THROUGHOUT THE LENGTH OF THE PROJECT, CONSISTENT WITH THE REQUIREMENTS OF SPECIFICATION 614 AND IN CONFORMANCE WITH THE OHIO MANUAL OF TRAFFIC CONTROL DEVICES. THE REMOVAL OF ALL GUARDRAIL SHALL AT ALL TIMES BE DIRECTED BY THE ENGINEER. NO GUARDRAIL SHALL BE REMOVED UNTIL SUFFICIENT REPLACEMENT MATERIAL IS READILY AVAILABLE TO MEET THE CONDITIONS SPECIFIED HEREIN.

ALL WORK AND TRAFFIC CONTROL DEVICES SHALL BE IN ACCORDANCE WITH 614 AND OTHER APPLICABLE PORTIONS OF THE SPECIFICATIONS, AS WELL AS THE OHIO MANUAL OF UNIFORM TRAFFIC CONTROL DEVICES. PAYMENT FOR ALL LABOR, EQUIPMENT, AND MATERIALS SHALL BE INCLUDED IN THE LUMP SUM CONTRACT FOR PRICE 614, MAINTAINING TRAFFIC, UNLESS SEPARATELY ITEMIZED IN THE PLANS.

DRIVEWAY ACCESS
THE CONTRACTOR'S ATTENTION IS CALLED TO THE NEED FOR PROVIDING UNOBSTRUCTED ACCESS TO THE ABUTTING ACTIVE DRIVEWAYS WITH MINIMAL DISRUPTION. DURING AND AFTER EXCAVATION FOR THE NEW PAVEMENT, THE CONTRACTOR SHALL MAINTAIN ACCESS TO THE DRIVEWAY BY MEANS OF TRAFFIC COMPACTED SURFACE. WHERE MORE THAN ONE DRIVEWAY PROVIDES ACCESS TO THE SAME PROPERTY, ONE DRIVE MAY BE CLOSED AT A TIME, WITH PERMISSION OF THE ENGINEER.

ANY DRIVEWAY THAT IS COMPLETELY OR PARTIALLY CLOSED SHALL HAVE PROPER PROTECTION PLACED AND MAINTAINED AROUND IT, SUCH AS FENCING, BARRICADES, AND/OR DRUMS, AS DIRECTED BY THE ENGINEER.

TRENCH FOR WIDENING
TRENCH EXCAVATION FOR WIDENING SHALL BE ONLY ON ONE SIDE OF THE PAVEMENT AT A TIME. THE OPEN TRENCH MAY BE PROTECTED BY BARRELS PLACED AT TWENTY (20) FOOT INTERVALS. PLACEMENT OF PROPOSED BASE MATERIAL SHALL FOLLOW AS CLOSELY AS POSSIBLE BEHIND THE EXCAVATION OPERATIONS. THE LENGTH OF WIDENING TRENCH WHICH IS OPEN AT ANY ONE TIME SHALL BE HELD TO A MINIMUM AND SHALL AT ALL TIMES BE SUBJECT TO THE APPROVAL OF THE ENGINEER.

PAYMENT FOR ALL OF THIS WORK SHALL BE INCLUDED IN THE LUMP SUM PRICE BID FOR ITEM 614, MAINTAINING TRAFFIC.

ITEM 630, STREET NAME SIGN SUPPORT, AS PER PLAN
STREET SIGN POSTS SHALL BE DECORATIVE STYLE DETAILED ON SHEET 18 OF THE PLANS. INSTALL PER MANUFACTURER'S RECOMMENDATION.

STANDARD CONSTRUCTION DRAWINGS					SUPPLEMENTAL SPECIFICATIONS	
BP-3.1	7/18/14				800	7/17/15
					832	1/17/14
CB-1.1	1/18/13					
CB-1.2	1/18/13					
DM-4.3	7/19/13					
DM-4.4	7/20/12					
HW-2.1	7/17/15					
MT-97.10	7/19/13				SPECIAL PROVISIONS	
MT-97.11	7/19/13					
					NONE	
TC-41.20	10/18/13					
TC-42.20	10/18/13					
TC-52.10	10/18/13					

SMOLEN ENGINEERING
1878 State Route 46 North, Jefferson, OH 44047
440-576-3565

NO.	DATE	REVISION

PROJECT NO. SEL698
SCALE:
DATE: 10/26/15
DESIGN: DDB
DRAWN: DDB
CHECK: JWS

MORNING STAR & FLAME LAKE DRIVE
ROADWAY IMPROVEMENTS, PHASE II
ROAMING SHORES, OHIO

GENERAL NOTES

SHEET NO.
3

SHEET NUMBER: X X X X

ITEM	ITEM EXT.	GRAND TOTAL	UNIT	DESCRIPTION
				ROADWAY
201	11000	LUMP	---	CLEARING AND GRUBBING
202	23000	143.00	SQ YD	PAVEMENT REMOVED
202	35100	521.00	LIN FT	PIPE REMOVED, 24" AND UNDER
202	58100	1.00	EACH	CATCH BASIN REMOVED
202	58200	2.00	EACH	INLET REMOVED
203	10000	176.00	CU YD	EXCAVATION
203	20000	486.00	CU YD	EMBANKMENT
204	10000	545.00	SQ YD	SUBGRADE COMPACTION
204	45000	1.00	HOUR	PROOF ROLLING
304	20000	197.00	CU YD	AGGREGATE BASE
407	13900	327.00	GAL	TACK COAT
407	14010	303.00	GAL	TACK COAT FOR INTERMEDIATE COURSE
448	46024	17.00	CU YD	ASPHALT CONCRETE INTERMEDIATE COURSE, TYPE 11, PG64-22 (DRIVEWAYS)
448	46048	12.00	CU YD	ASPHALT CONCRETE SURFACE COURSE, TYPE 1, PG64-22 (DRIVEWAYS)
448	46050	297.00	CU YD	ASPHALT CONCRETE INTERMEDIATE COURSE, TYPE 2, PG64-22
448	46900	158.00	CU YD	ASPHALT CONCRETE SURFACE COURSE, TYPE 1, PG64-22
448	10000	75.00	SQ YD	6" NON-REINFORCED CONCRETE PAVEMENT
611	34500	5.00	EACH	MANHOLE ADJUSTED TO GRADE
617	14000	105.00	CU YD	COMPACTED AGGREGATE
SPECIAL	---	14.00	SQ YD	DRIVEWAY REPAIR, TYPE A (GRAVEL)
SPECIAL	---	11.00	SQ YD	DRIVEWAY REPAIR, TYPE B (CONCRETE)
				DRAINAGE
511	46600	6.00	EACH	CLASS C CONCRETE, HALF-HEIGHT HEADWALL
611	04400	84.00	LIN FT	12" CONDUIT, TYPE B, 707.33
611	04600	1505.00	LIN FT	12" CONDUIT, TYPE C, 707.33
611	07200	42.00	LIN FT	18" CONDUIT, TYPE B, 707.33
611	07400	95.00	LIN FT	18" CONDUIT, TYPE C, 707.33
611	04500	24.00	EACH	CATCH BASIN, NO. 2-2B
611	04900	4.00	EACH	CATCH BASIN, NO. 2-3
				TRAFFIC CONTROL
630	03100	24.00	FT	GROUND MOUNTED SUPPORT, NO. 3 POST
630	08501	2.00	EACH	STREET NAME SIGN SUPPORT, AS PER PLAN
630	80100	18.00	SQ FT	SIGN, FLAT SHEET
630	80511	4.00	EACH	SIGN, STREET NAME, AS PER PLAN
630	85000	4.00	EACH	REMOVAL OF GROUND MOUNTED SIGN AND STORAGE
				EROSION CONTROL
659	10000	9,800.00	SQ YD	SEEDING AND MULCHING
659	14000	1,470.00	SQ YD	REPAIR SEEDING AND MULCHING
659	20000	0.11	TON	COMMERCIAL FERTILIZER
659	31000	2.02	ACRE	LIME
659	35000	0.165	MGAL	WATER
832	15000	1.00	EACH	STORMWATER POLLUTION PREVENTION PLAN
832	30000	3300.00	EACH	EROSION CONTROL
				INCIDENTALS
103	05000	LUMP	---	PREMIUM FOR CONTRACT PERFORMANCE AND FOR PAYMENT BOND
614	10000	LUMP	---	MAINTAINING TRAFFIC
623	10000	LUMP	---	CONSTRUCTION LAYOUT STAKES
624	10000	LUMP	---	MOBILIZATION

SMOLEN ENGINEERING
1878 State Route 46 North, Jefferson, OH 44047
440-576-0505

REVISION

NO.	DATE

PROJECT NO. SEL098
SCALE:
DATE: 10/26/15
DESIGN: DDB
DRAWN: DDB
CHECK: JWS

MORNING STAR & FLAME LAKE DRIVE
ROADWAY IMPROVEMENTS, PHASE II
ROAMING SHORES, OHIO

GENERAL SUMMARY

SHEET NO.
4

REMOVAL & ADJUSTMENT SUBSUMMARY

SHEET NO.	REFERENCE NO.	STATION		SIDE	202				630	611	SPECIAL	
					PAVEMENT REMOVED	PIPE REMOVED, 24" AND UNDER	INLET REMOVED	CATCH BASIN REMOVED	SIGN REMOVED	MANHOLE ADJUSTED TO GRADE	DRIVEWAY REPAIR, TYPE A	DRIVEWAY REPAIR, TYPE B
		FROM	TO		SQ. YD.	FT.	EACH	EACH	EACH			
7	R-1	31+82.5	32+15.0	LEFT		32.5						
7	R-2	32+15.0	---	LEFT			1.0					
7	R-3	32+15.0	32+58.0	LEFT		43.0						
7	R-4	33+54.0	34+34.5	RIGHT		80.5						
7	R-5	34+10.0	---	C/L		42.0						
7	R-6	34+34.5	---	RIGHT				1.0				
7	DR-1	32+25.0	32+49.5	LEFT							13.8	
7	DR-2	33+55.8	33+75.6	RIGHT								10.7
8	A-1	36+88.3	---	RIGHT						1.0		
8	R-7	37+73.0	38+83.3	RIGHT		110.3						
8	R-8	38+05.1	38+35.9	LEFT		30.8						
8	R-9	38+20.0	---	RIGHT	32.50							
8	R-10	39+50.7	---	RIGHT					1.0			
8	R-11	---	---	RIGHT	49.50							
8	R-12	---	---	LEFT	18.30							
8	R-13	39+64.0	---	LEFT					1.0			
9	A-2	21+90.0	---	LEFT						1.0		
9	A-3	23+81.0	---	LEFT						1.0		
9	R-14	22+46.5	---	C/L		42.0						
9	R-15	22+83.0	23+51.0	RIGHT		68.0						
9	R-15a	23+08.0	---	RIGHT	42.60							
9	R-16	23+51.0	---	RIGHT			1.0					
9	R-17	23+51.0	24+22.0	RIGHT		71.0						
10	A-4	25+40.0	---	LEFT						1.0		
10	A-5	27+10.0	---	LEFT						1.0		
10	R-18	0+29.0	---	LEFT					1.0			
10	R-19	0+44.0	---	LEFT					1.0			
TOTALS CARRIED TO GENERAL SUMMARY					143.00	521.00	2.00	1.00	4.00	5.00	14.00	11.00

SIGNAGE SUBSUMMARY

SHEET NO.	REFERENCE NO.	STATION	OFFSET	SIDE	SIGN TYPE	630			
						GROUND MOUNTED SUPPORT, NO. 3 POST	STREET NAME SIGN SUPPORT, AS PER PLAN	SIGN, FLAT SHEET	SIGN, STREET NAME, AS PER PLAN
						FT.	EACH	SQ. FT.	EACH
X	SN-1	39+51.0	28.0'	RIGHT	STOP SIGN	12.0		9.0	
X	SN-2	39+67.0	40.0'	RIGHT	STREET NAME		1.0		2.0
X	SN-3	0+42.0	30.0'	LEFT	STOP SIGN	12.0		9.0	
X	SN-4	0+28.0	47.0'	LEFT	STREET NAME		1.0		2.0
TOTALS CARRIED TO GENERAL SUMMARY						24.00	2.00	18.00	4.00

SMOLEN ENGINEERING
1878 State Route 46 North, Jefferson, OH 44047
440-576-0505

REVISION

NO.	DATE

PROJECT NO. SEL098
SCALE:
DATE: 10/1/15
DESIGN: DDB
DRAWN: DDB
CHECK: JWS

MORNING STAR & FLAME LAKE DRIVE
ROADWAY IMPROVEMENTS, PHASE II
ROAMING SHORES, OHIO

SUB-SUMMARIES

SHEET NO.
5

DRIVEWAY SUBSUMMARY

SHEET NO.	REFERENCE NO.	STATION	SIDE	DRIVE TYPE	APRON LENGTH "L1"	DRIVE LENGTH "L2"	WIDTH "W"	WIDTH LEFT "WL" LEFT SIDE OF APRON LOOKING FROM C/L	WIDTH LEFT "WR" LEFT SIDE OF APRON LOOKING FROM C/L	203 EXCAVATION	304 4" AGGREGATE BASE	304 6" AGGREGATE BASE	407 TACK COAT (0.08 GAL./SQ. YD.)	448 2" ASPHALT CONCRETE INTERMEDIATE COURSE, TYPE 2, PG64-22, (DRIVEWAYS)	448 1½" ASPHALT CONCRETE SURFACE COURSE, TYPE 1, PG64-22, (DRIVEWAYS)	452 6" NON-REINFORCED CONCRETE PAVEMENT
					FT.	FT.	FT.	FT.	FT.	CU. YD.	CU. YD.	CU. YD.	GAL.	CU. YD.	CU. YD.	SQ. YD.
8	DW-1	38+20.0	LEFT	RESIDENTIAL	8.0'	7.6'	16.1'	4.0'	4.0'	1.8	3.6					32.6
8	DW-2	38+33.2	RIGHT	RESIDENTIAL	8.0'	12.4'	17.1'	4.0'	4.0'	8.2		7.1	3.4	2.4	1.8	
9	DW-3	22+09.1	LEFT	RESIDENTIAL	8.0'	9.5'	13.1'	4.0'	4.0'	5.7		4.9	2.4	1.6	1.2	
9	DW-4	22+62.5	LEFT	RESIDENTIAL	8.0'	9.5'	14.0'	4.0'	4.0'	6.0		5.2	2.5	1.7	1.3	
9	DW-5	23+08.0	RIGHT	RESIDENTIAL	8.0'	11.0'	18.0'	4.0'	4.0'	4.7	4.7					42.4
9	DW-6	23+38.2	LEFT	RESIDENTIAL	8.0'	8.5'	17.0'	4.0'	4.0'	5.2		6.3	2.9	2.1	1.5	
9	DW-7	23+79.9	LEFT	RESIDENTIAL	8.0'	8.5'	16.3'	4.0'	4.0'	4.7		6.0	2.8	2.0	1.3	
9	DW-8	24+02.0	RIGHT	RESIDENTIAL	8.0'	11.5'	12.5'	4.0'	4.0'	4.2		5.1	2.5	1.7	1.2	
9	DW-9	24+65.2	LEFT	RESIDENTIAL	8.0'	7.0'	31.3'	4.0'	4.0'	7.7		9.4	4.5	3.1	2.4	
10	DW-10	27+67.5	LEFT	RESIDENTIAL	8.0'	6.0'	17.7'	4.0'	4.0'	4.2		5.1	2.5	1.7	1.2	
TOTALS CARRIED TO GENERAL SUMMARY										52.40	8.30	49.10	23.50	16.30	11.90	75.00

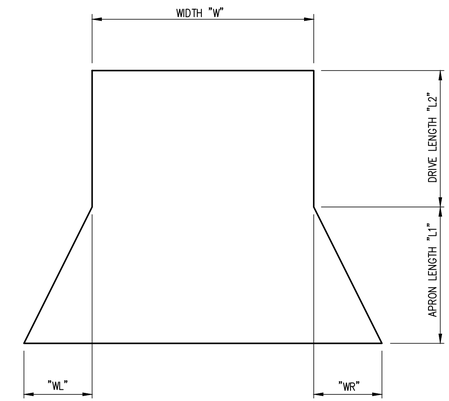

DRIVEWAY DESIGNATION
NTS

SMOLEN ENGINEERING
1878 State Route 46 North, Jefferson, OH 44047
440-576-0505

REVISION

NO.	DATE

PROJECT NO. 5EL698
SCALE:
DATE: 10/26/15
DESIGN: DDB
DRAWN: DDB
CHECK: JWS

MORNING STAR & FLAME LAKE DRIVE
ROADWAY IMPROVEMENTS, PHASE II
ROAMING SHORES, OHIO

SUB-SUMMARIES

SHEET NO.
6

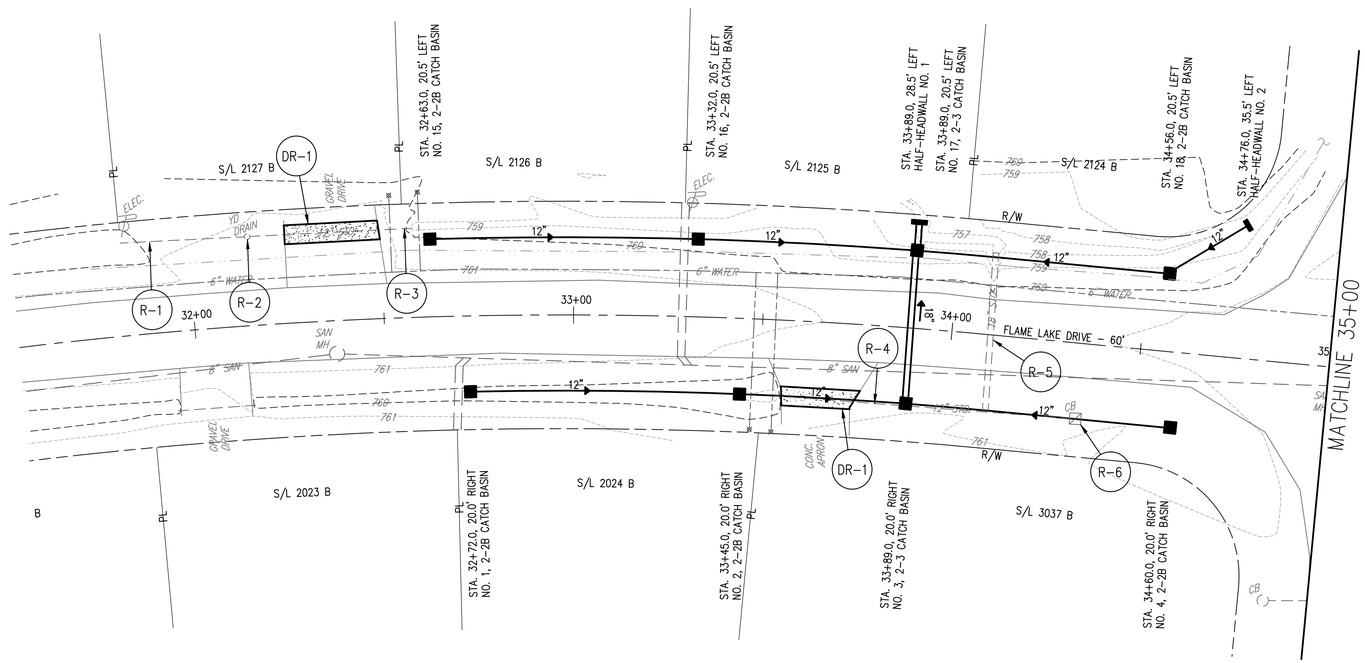

BALOON LEGEND

SN	STREET SIGN
A	ADJUST TO GRADE
DR	DRIVEWAY REPAIR
DW	DRIVEWAY
R	REMOVE

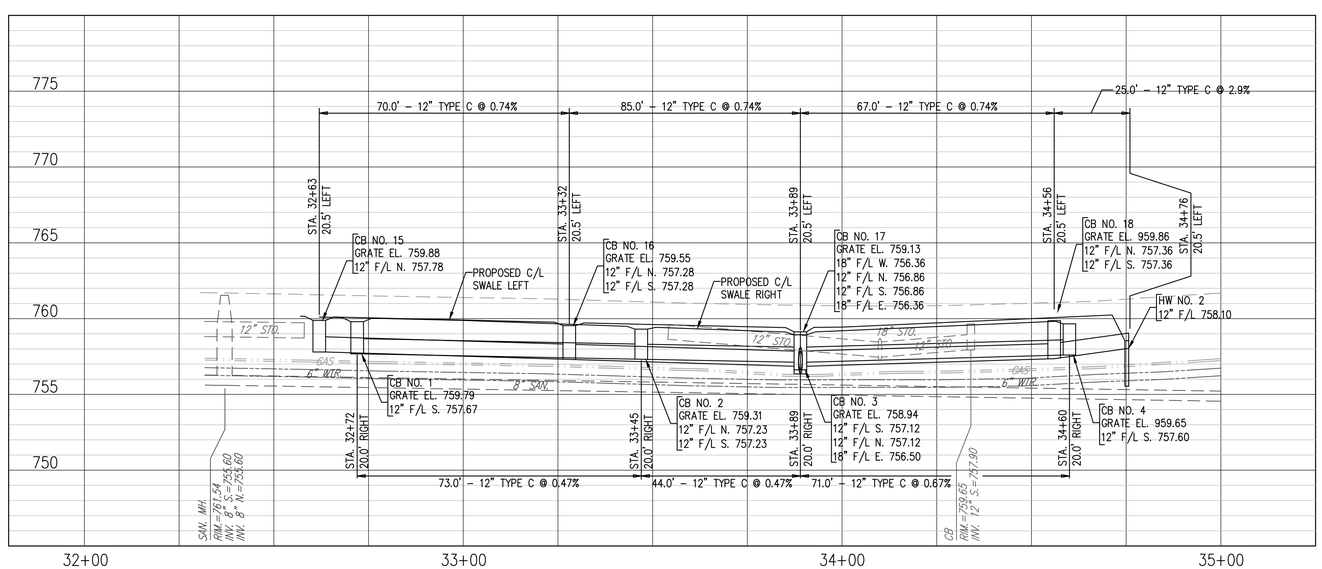

SMOLEN ENGINEERING
1876 State Route 46 North, Jefferson, OH 44047
440-576-3585

NO.	DATE	REVISION

PROJECT NO. SEL698

SCALE:
DATE: 10/26/15
DESIGN: DDB
DRAWN: DDB
CHECK: JWS

MORNING STAR & FLAME LAKE DRIVE
ROADWAY IMPROVEMENTS, PHASE II
ROAMING SHORES, OHIO

PLAN & PROFILE FLAME LAKE DRIVE
STA. 31+50 - 35+00

SHEET NO.
7

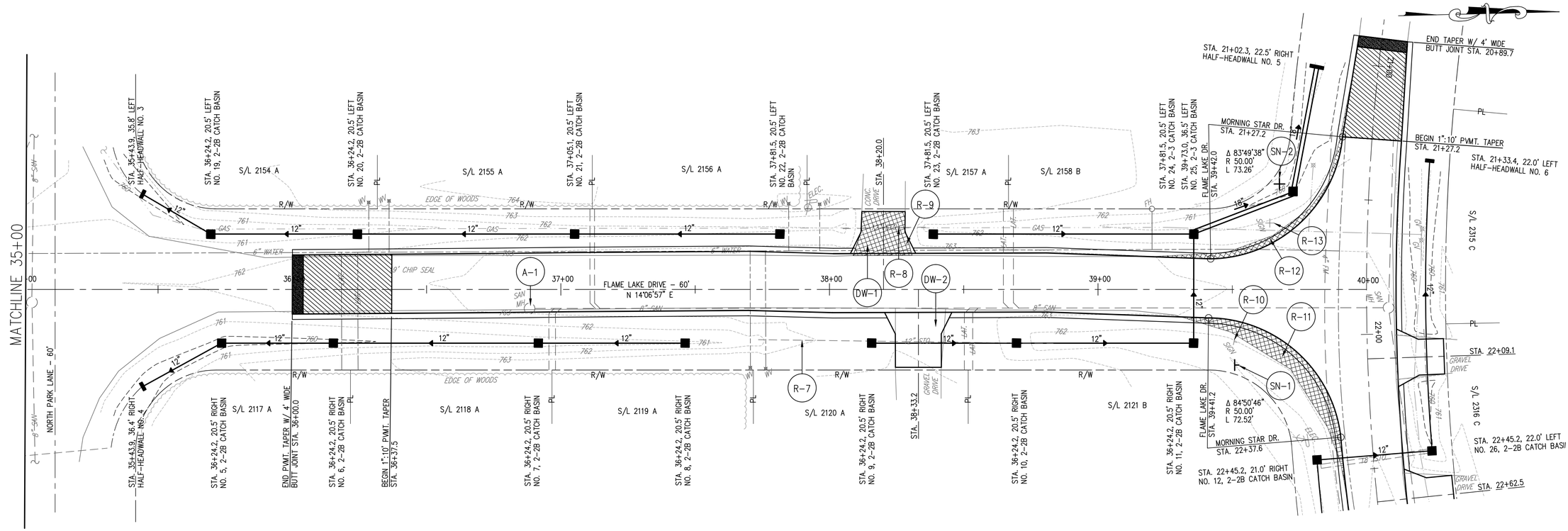

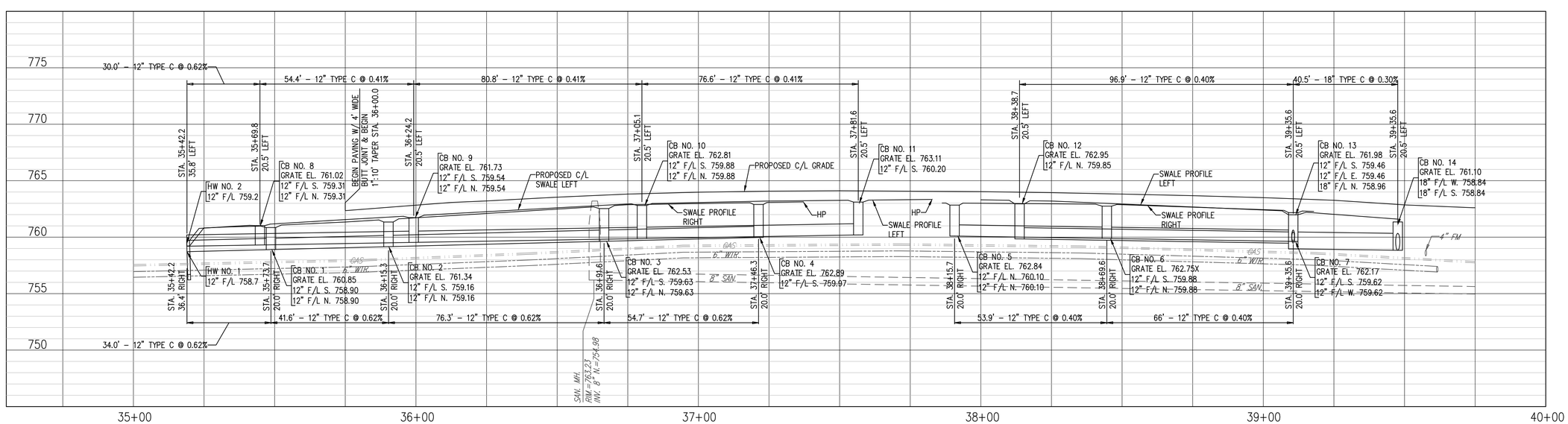

SMOLEN ENGINEERING
1876 State Route 46 North, Jefferson, OH 44047
440-576-3585

NO.	DATE	REVISION

PROJECT NO. SEL698

SCALE:
DATE: 10/26/15
DESIGN: DDB
DRAWN: DDB
CHECK: JWS

MORNING STAR & FLAME LAKE DRIVE ROADWAY IMPROVEMENTS, PHASE II

ROAMING SHORES, OHIO

PLAN & PROFILE FLAME LAKE DRIVE STA. 35+00 - 40+00

SHEET NO.

8

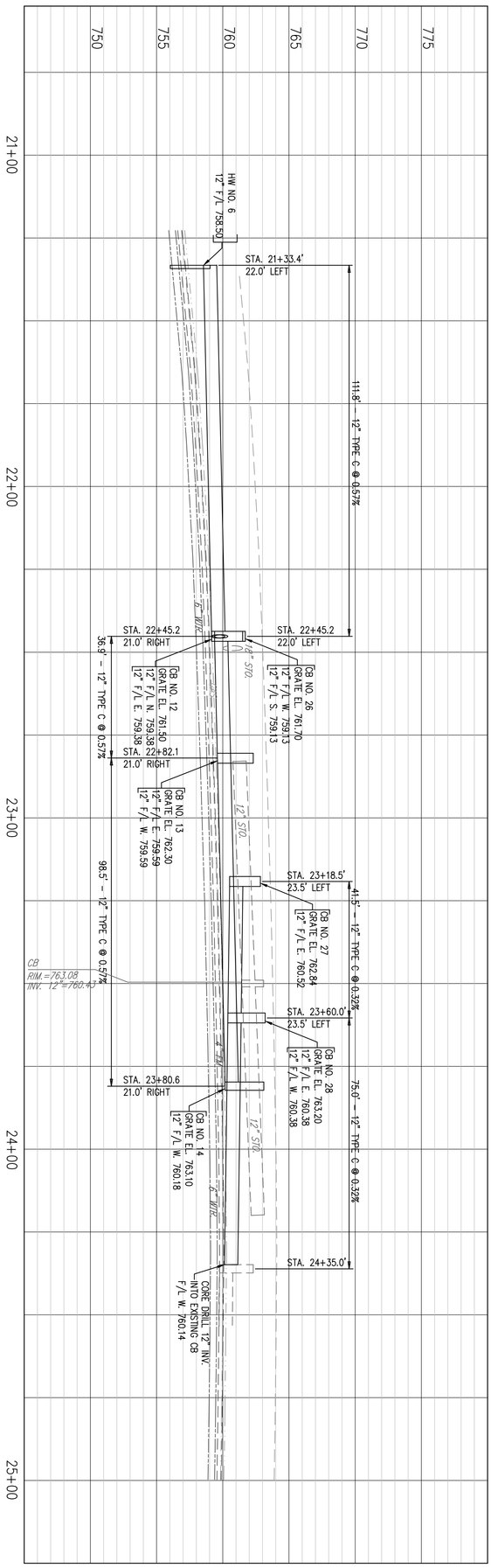

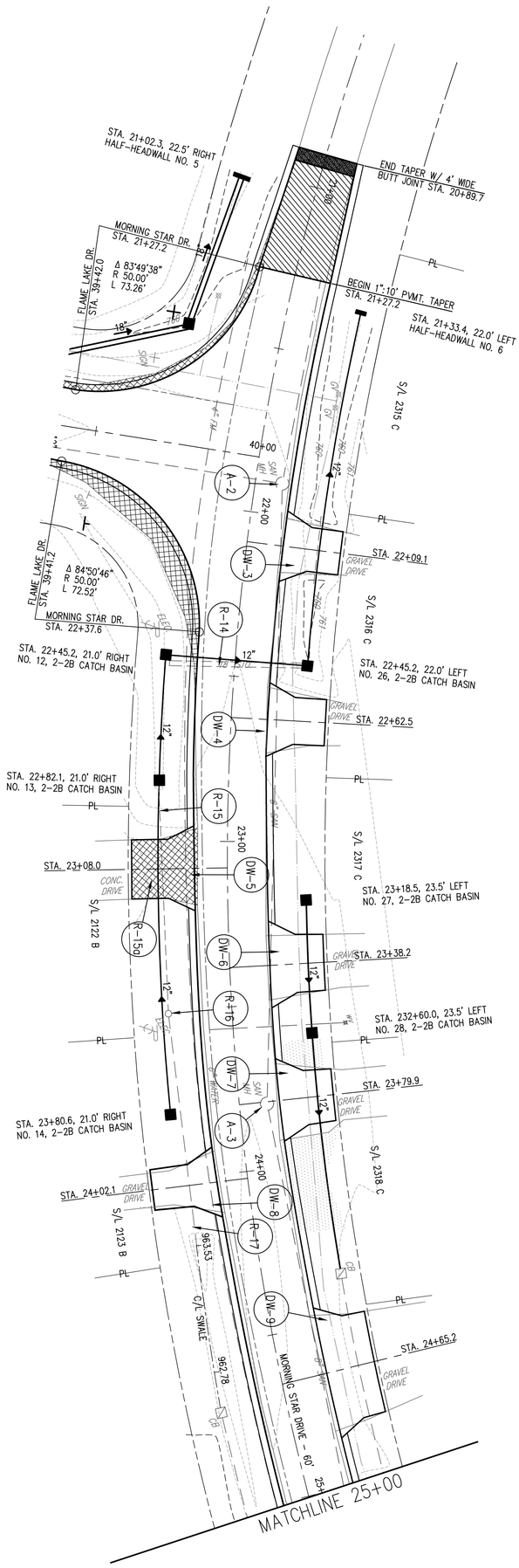

SHEET NO. 9	MORNING STAR & FLAME LAKE DRIVE ROADWAY IMPROVEMENTS, PHASE II ROAMING SHORES, OHIO PLAN & PROFILE MORNING STAR DRIVE STA. 20+89.70 - 25+00	PROJECT NO. SEL698 SCALE: DATE: 10/26/15 DESIGN: DDB DRAWN: DDB CHECK: JWS	NO. / DATE / REVISION

SMOLEN ENGINEERING
1876 State Route 46 North, Jefferson, OH 44047
440-576-0505

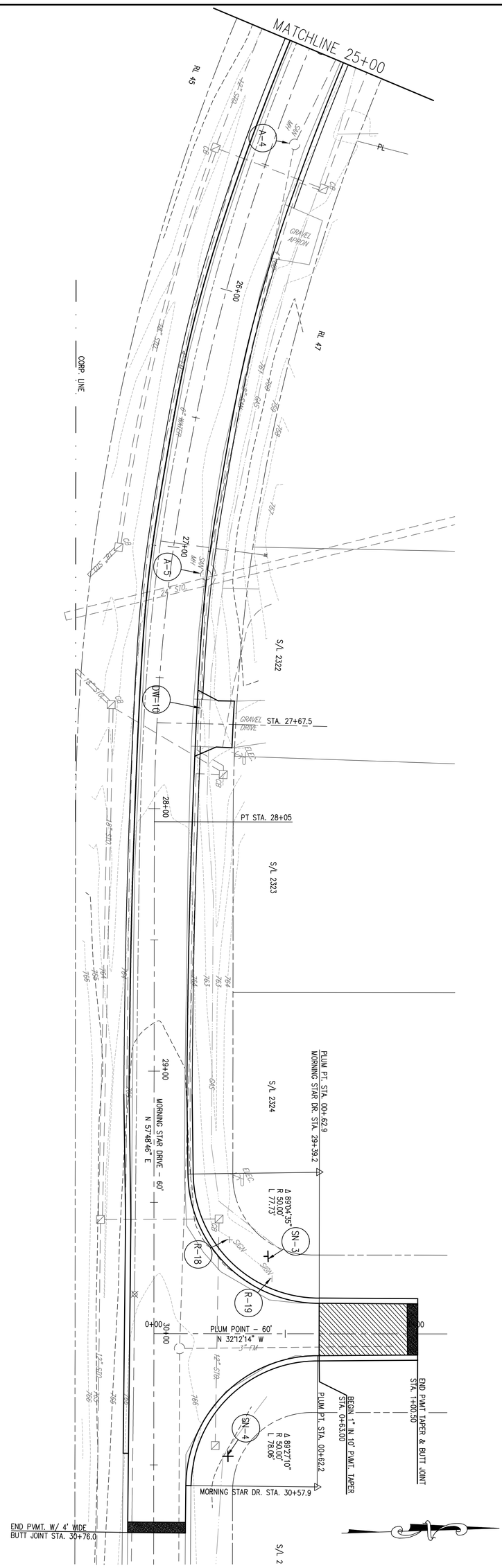

SHEET NO. 10

MORNING STAR & FLAME LAKE DRIVE
ROADWAY IMPROVEMENTS, PHASE II
ROAMING SHORES, OHIO

PLAN & PROFILE MORNING STAR DRIVE
STA. 25+00 - 30+76

PROJECT NO. SEL698

SCALE:
DATE: 9/1/15
DESIGN: DDB
DRAWN: DDB
CHECK: JWS

NO.	DATE	REVISION

SMOLEN ENGINEERING
1876 State Route 46 North, Jefferson, OH 44047
440-576-0505

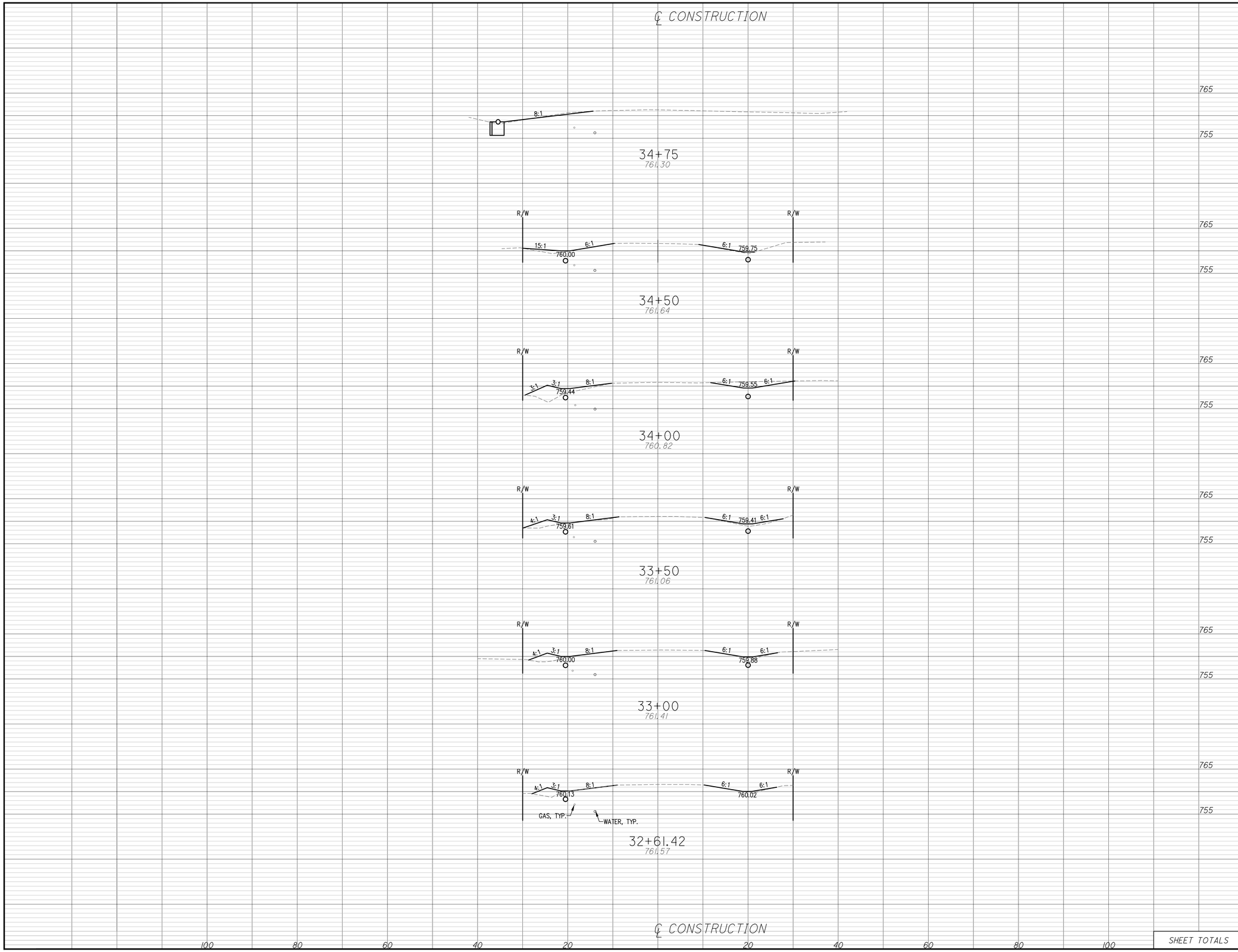

	END AREA		VOLUME	
	CUT	FILL	CUT	FILL
34+75	2.92	0.82		
			1.35	2.83
34+50	0.00	5.30		
			13.3	25.4
34+00	14.41	22.12		
			0	12.1
33+50	0.00	13.05		
			0.0	21.5
33+00	0.00	10.14		
			0.0	13.8
32+61.42	0.00	9.10		
SHEET TOTALS			14.7	75.5

SMOLEN ENGINEERING
1878 State Route 46 North, Jefferson, OH 44047
440-576-0565

REVISION

NO.	DATE	

PROJECT NO. SEL098

SCALE:
DATE: 9/1/15
DESIGN: DDB
DRAWN: DDB
CHECK: JWS

MORNING STAR & FLAME LAKE DRIVE
ROADWAY IMPROVEMENTS, PHASE II
ROAMING SHORES, OHIO

CROSS-SECTIONS FLAME LAKE DRIVE
STA. 32+61.42 - 34+75

SHEET NO.
11

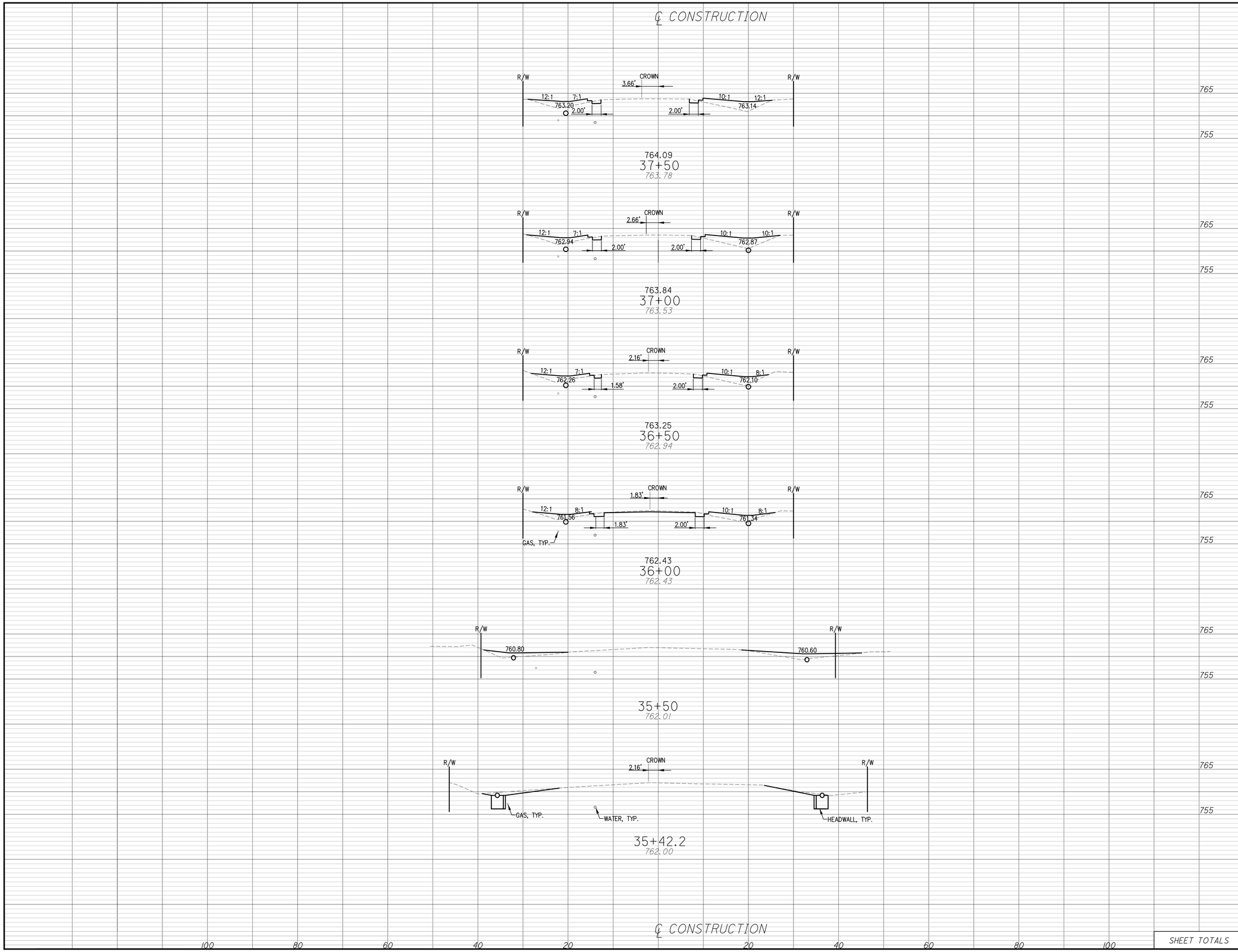

	END AREA CUT	END AREA FILL	VOLUME CUT	VOLUME FILL
37+50	2.54	33.37		
			2.43	33.28
37+00	2.62	35.94		
			4.78	58.31
36+50	2.54	27.03		
			8.98	46.76
36+00	7.16	23.47		
			6.63	47.90
35+50	0.00	28.26		
			1.33	4.08
35+42.2	9.20	0.00		
SHEET TOTALS			24.1	190.3

SMOLEN ENGINEERING
1878 State Route 46 North, Jefferson, OH 44047
440-576-0565

REVISION

NO.	DATE

PROJECT NO. SEL098

SCALE:
DATE: 9/1/15
DESIGN: DDB
DRAWN: DDB
CHECK: JWS

MORNING STAR & FLAME LAKE DRIVE
ROADWAY IMPROVEMENTS, PHASE II
ROAMING SHORES, OHIO

CROSS-SECTIONS FLAME LAKE DRIVE
STA. 35+42.2 - 37+50

SHEET NO.
12

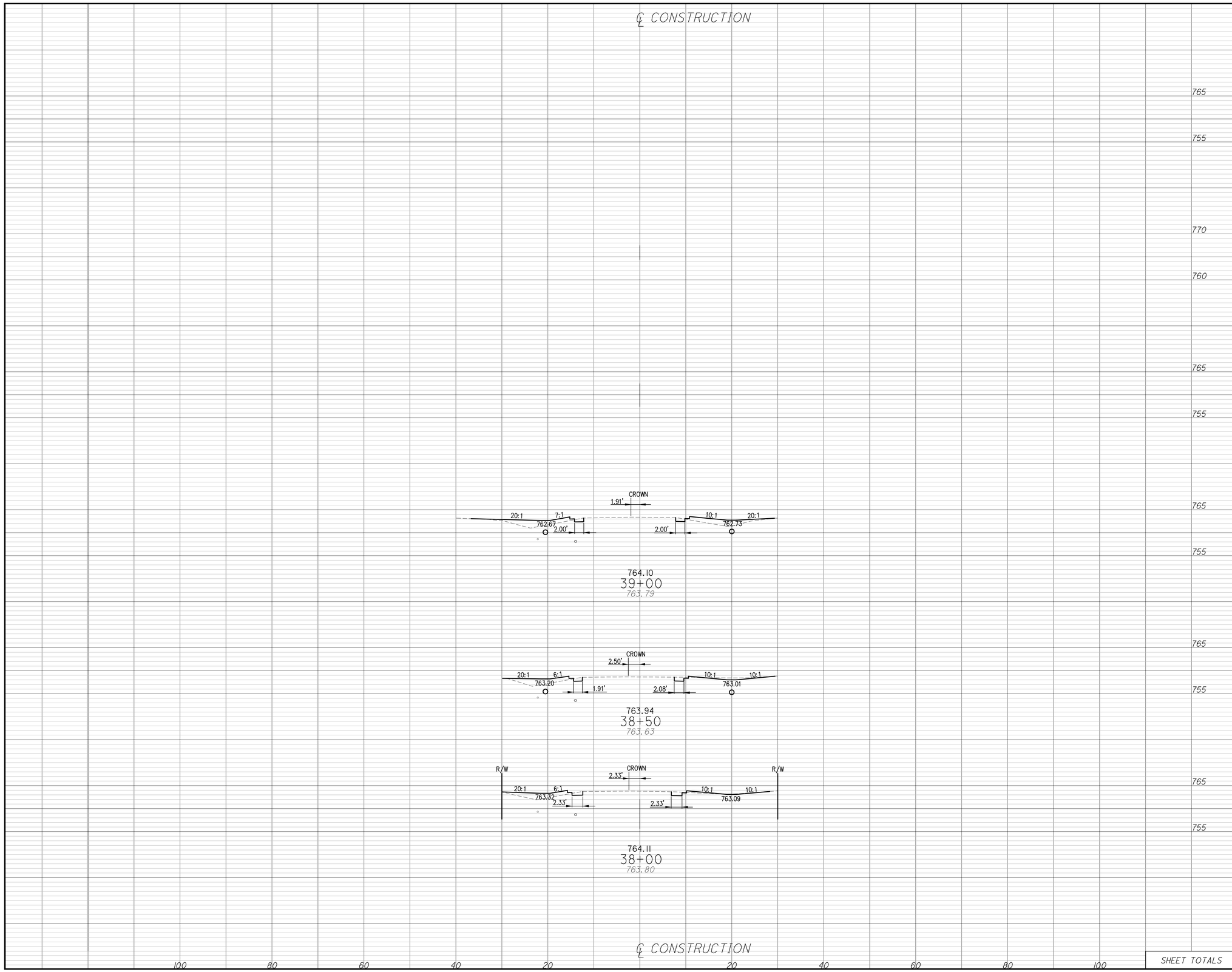

	END AREA		VOLUME	
	CUT	FILL	CUT	FILL
	2.64	32.31		
			8.62	42.22
	6.67	13.29		
			9.38	24.90
	3.46	13.60		
			5.56	43.49
SHEET TOTALS			23.56	110.61

SMOLEN ENGINEERING
1876 State Route 46 North, Jefferson, OH 44047
440-576-3585

NO.	DATE	REVISION

PROJECT NO. SEL698
SCALE:
DATE: 10/26/15
DESIGN: DDB
DRAWN: DDB
CHECK: JWS

MORNING STAR & FLAME LAKE DRIVE
ROADWAY IMPROVEMENTS, PHASE II
ROAMING SHORES, OHIO

CROSS-SECTIONS FLAME LAKE DRIVE
STA. 38+00 - 39+00

SHEET NO.
13

SEEDING END WIDTH	SEEDING SQ. YDS.

℄ CONSTRUCTION

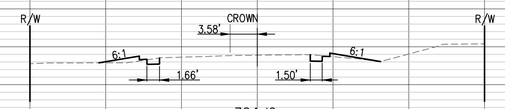

764.19
25+00
763.88

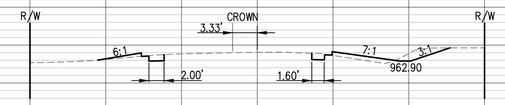

764.35
24+50
764.04

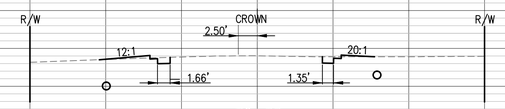

764.33
24+00
764.02

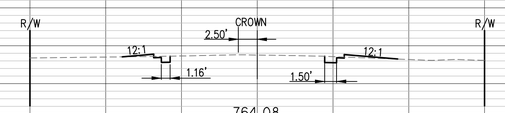

764.08
23+50
763.77

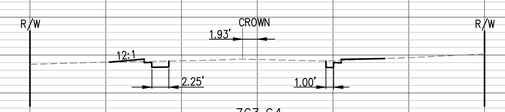

763.64
23+00
763.33

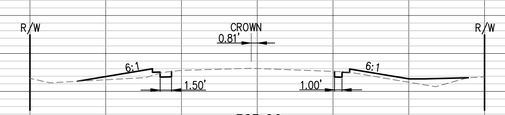

763.90
22+50
763.59

℄ CONSTRUCTION

	END AREA CUT	END AREA FILL	VOLUME CUT	VOLUME FILL
770				
760	2.44	3.54		
			9.71	8.34
770				
760	8.05	5.47		
			10.15	6.51
770				
760	2.91	1.56		
			2.44	1.60
770				
760	2.53	1.73		
			5.25	2.67
770				
760	3.04	1.15		
			4.40	14.06
770				
760	1.71	14.03		
SHEET TOTALS			32.0	33.2

100 80 60 40 20 20 40 60 80 100

SMOLEN ENGINEERING
1878 State Route 46 North, Jefferson, OH 44047
440-576-3565

REVISION

NO.	DATE

PROJECT NO. SEL098
SCALE:
DATE: 9/1/15
DESIGN: DDB
DRAWN: DDB
CHECK: JWS

MORNING STAR & FLAME LAKE DRIVE
ROADWAY IMPROVEMENTS, PHASE II
ROAMING SHORES, OHIO

CROSS-SECTIONS MORNING STAR DRIVE
STA. 22+50 - 25+00

SHEET NO.
14

SEEDING END WIDTH	SEEDING SQ. YDS.	END AREA CUT	END AREA FILL	VOLUME CUT	VOLUME FILL
		1.93	7.26		
				2.87	13.32
		1.17	7.13		
				3.22	12.08
		2.31	5.92		
				3.89	9.79
		3.89	9.79		
				3.47	9.33
		1.86	5.43		
				3.66	7.97
		2.09	3.18		
				2.71	2.94
SHEET TOTALS				19.8	55.4

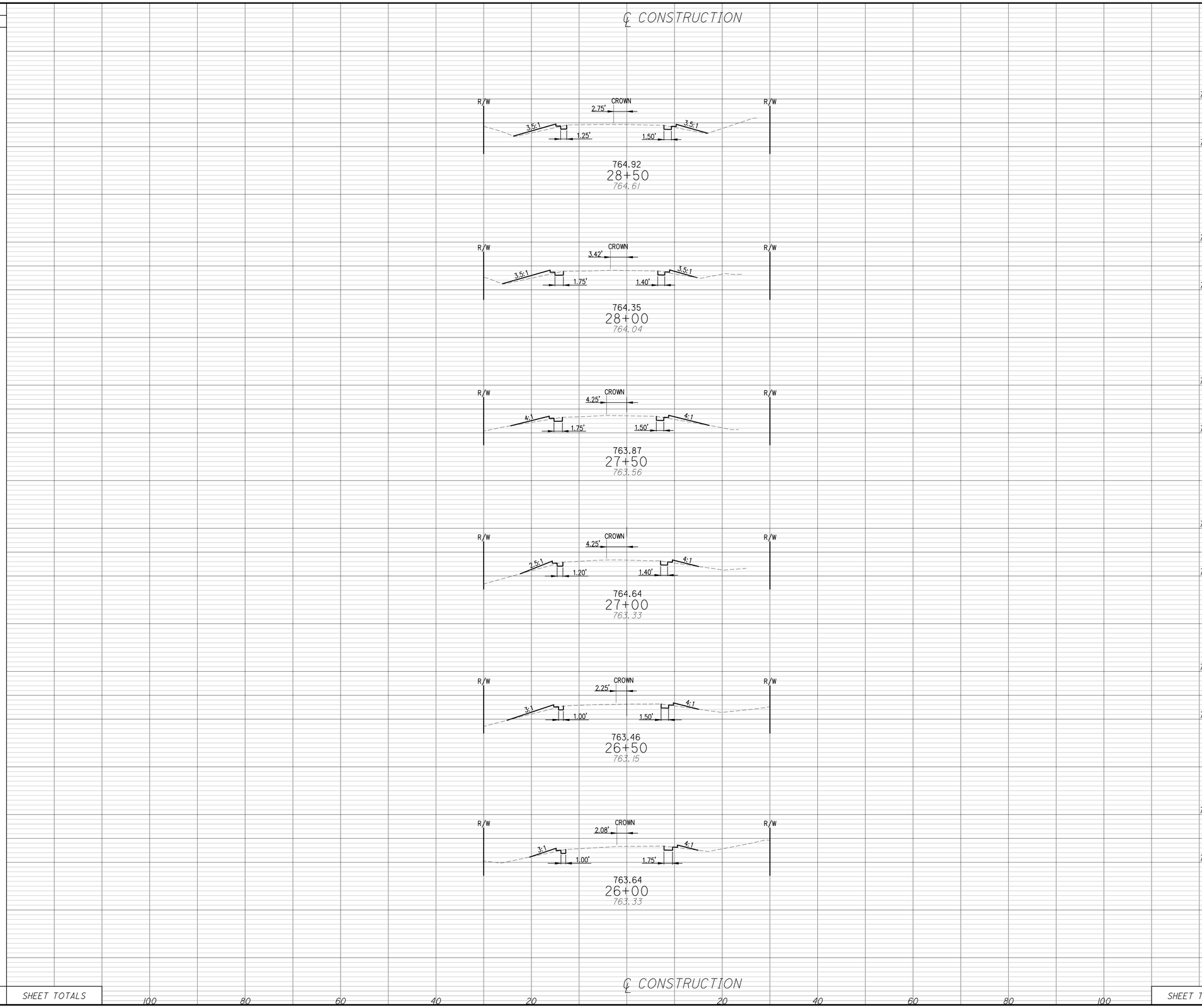

SMOLEN ENGINEERING
1878 State Route 46 North, Jefferson, OH 44047
440-576-0565

NO.	DATE	REVISION

PROJECT NO. SEL098
SCALE:
DATE: 10/26/15
DESIGN: DDB
DRAWN: DDB
CHECK: JWS

MORNING STAR & FLAME LAKE DRIVE
ROADWAY IMPROVEMENTS, PHASE II
ROAMING SHORES, OHIO

CROSS-SECTIONS MORNING STAR DRIVE
STA. 26+00 - 28+50

SHEET NO.
15

SEEDING	
END WIDTH	SQ. YDS.

	END AREA		VOLUME	
	CUT	FILL	CUT	FILL
770				
760	2.63	5.75		
			4.44	9.50
770				
760	2.17	4.51		
			3.80	10.90
SHEET TOTALS			8.4	20.4

SHEET TOTALS 100 80 60 40 20 20 40 60 80 100

SMOLEN ENGINEERING
1878 State Route 46 North, Jefferson, OH 44047
440-576-0565

NO.	DATE	REVISION

PROJECT NO. SEL698

SCALE:
DATE: 10/26/15
DESIGN: DDB
DRAWN: DDB
CHECK: JWS

MORNING STAR & FLAME LAKE DRIVE
ROADWAY IMPROVEMENTS, PHASE II
ROAMING SHORES, OHIO

CROSS-SECTIONS MORNING STAR DRIVE
STA. 29+00 - 29+50

SHEET NO.
16

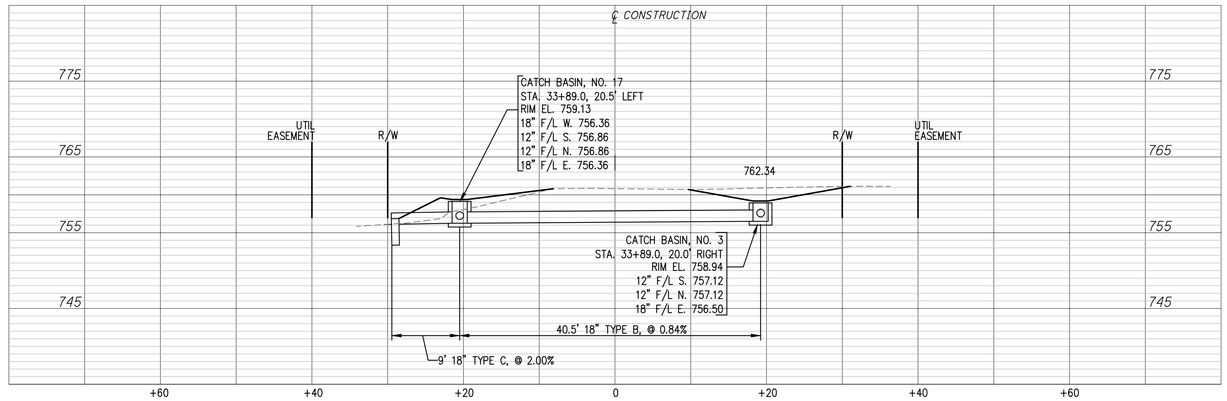

FLAME LAKE DR. – STA. 33+89.00

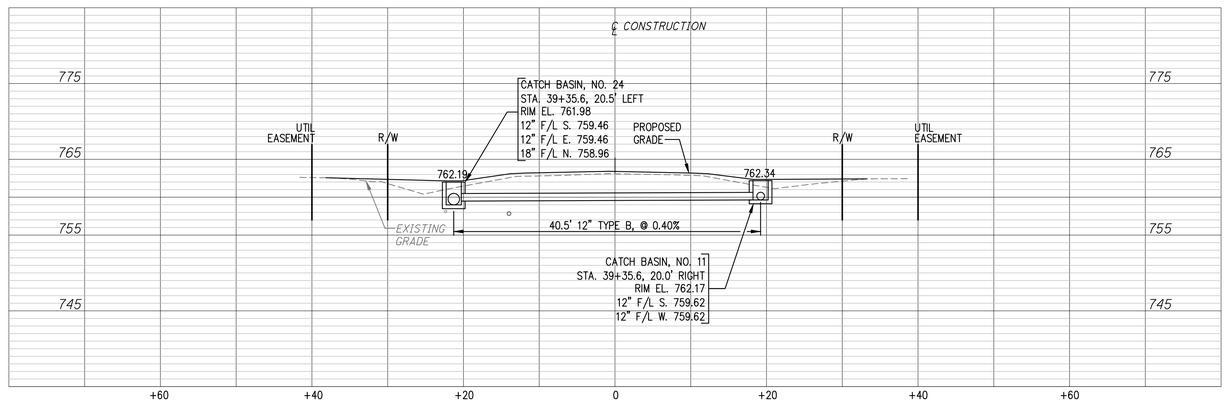

FLAME LAKE DR. – STA. 39+35.60

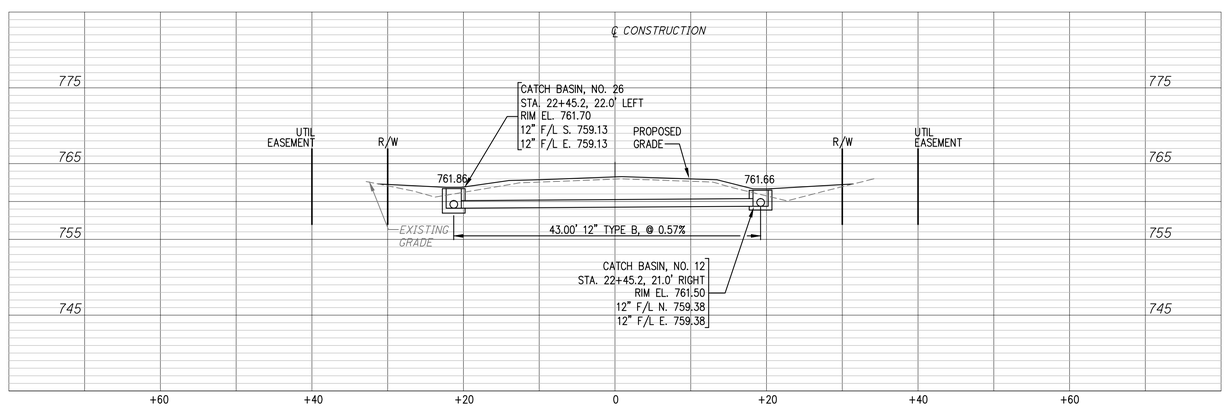

MORNING STAR DR. – STA. 22+45.20

SMOLEN ENGINEERING
1878 State Route 46 North, Jefferson, OH 44047
440-576-0565

NO.	DATE	REVISION

PROJECT NO. SEL698
SCALE:
DATE: 10/26/15
DESIGN: DDB
DRAWN: DDB
CHECK: JWS

MORNING STAR & FLAME LAKE DRIVE
ROADWAY IMPROVEMENTS, PHASE II
ROAMING SHORES, OHIO

DRAINAGE DETAILS

SHEET NO.
17

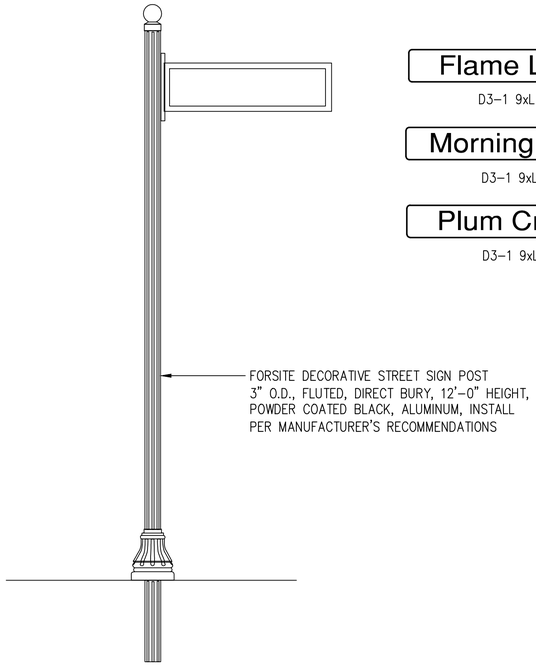

Flame Lake Dr

D3-1 9xL QTY-1

Morning Star Dr

D3-1 9xL QTY-2

Plum Creek Dr

D3-1 9xL QTY-1

R1-1 36x36 QTY-1

STREET NAME SIGN POST, AS PER PLAN
NTS

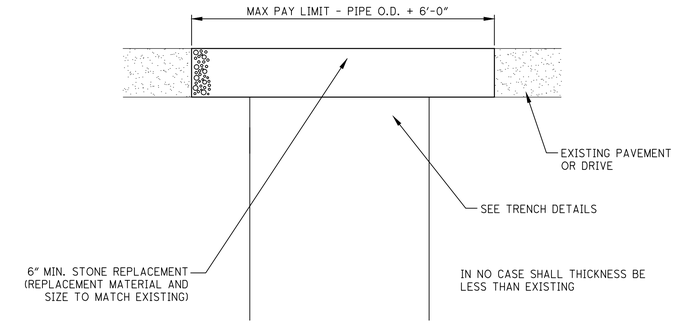

DRIVEWAY REPAIR, TYPE A
NTS

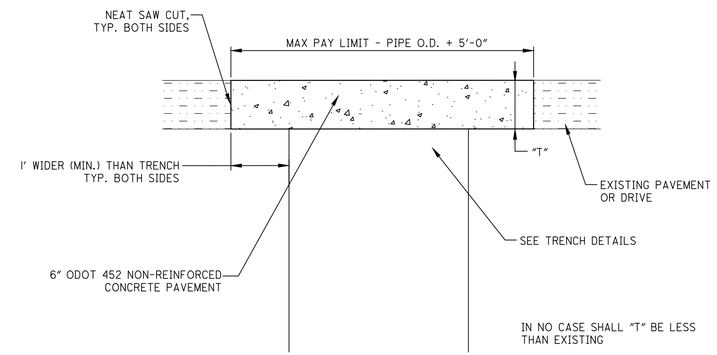

DRIVEWAY REPAIR, TYPE B
NTS

SMOLEN ENGINEERING
1878 State Route 46 North, Jefferson, OH 44047
440-576-0565

NO.	DATE	REVISION

PROJECT NO. SEL698

SCALE:
DATE: 9/1/15
DESIGN: DDB
DRAWN: DDB
CHECK: JWS

MORNING STAR & FLAME LAKE DRIVE
ROADWAY IMPROVEMENTS, PHASE II
ROAMING SHORES, OHIO

STANDARD DETAILS

SHEET NO.
18